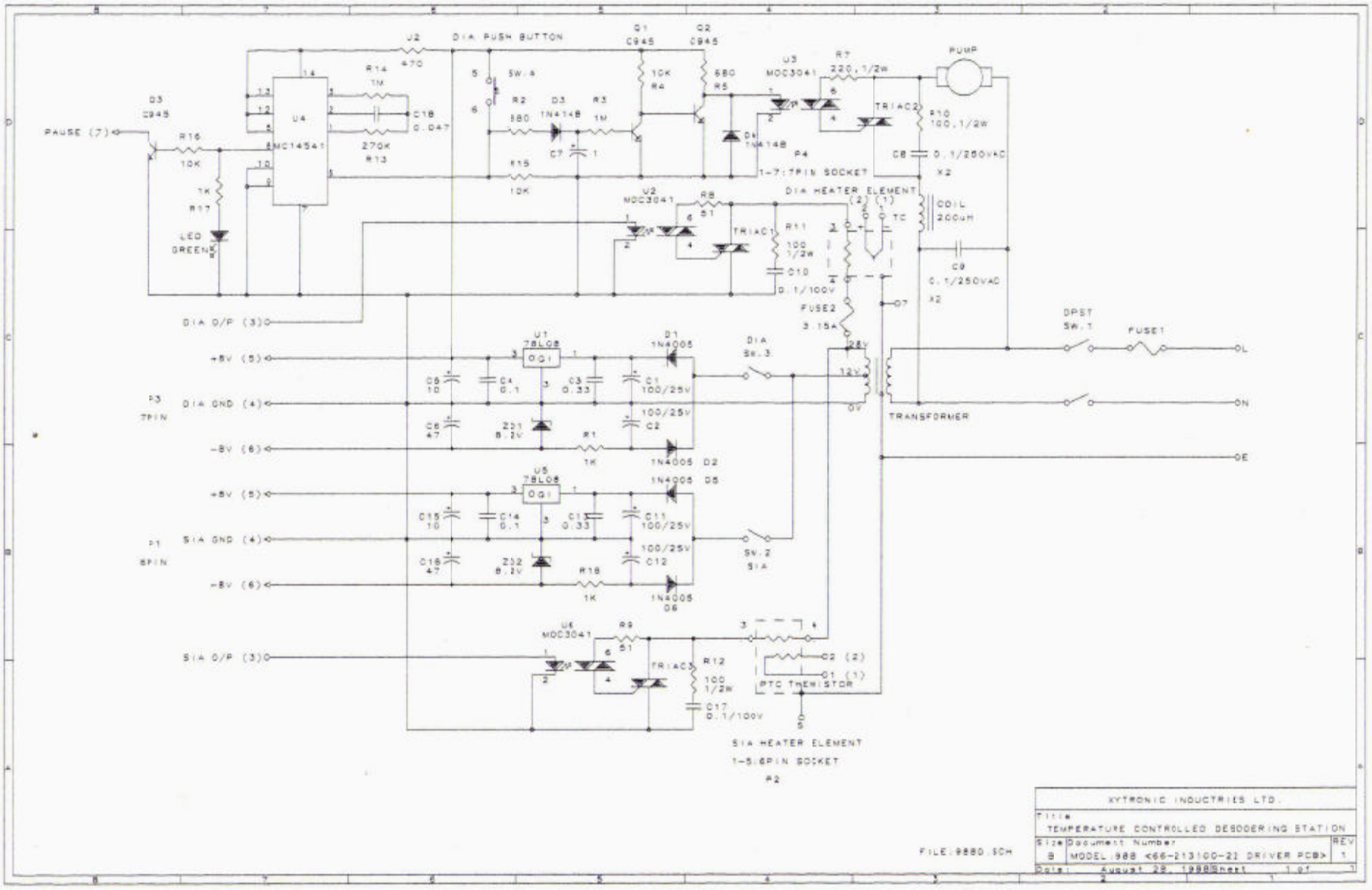
U2
470
DIA PUSH BUTTON
Q1
C945
Q2
C945
PUMP
U3
MOC3041
R7
220,1/2W
R14
1M
U4
MC14541
C18
0.047
270K
R13
SW.4
R2
680
D3
1N4148
R3
1M
10K
R4
680
R5
D4
1N4148
TRIAC2
R10
100,1/2W
C8
0.1/250VAC
X2
P4
1-7:7PIN SOCKET
Q3
C945
PAUSE (7)
R16
10K
1K
R17
LED
GREEN
C7
1
R15
10K
U2
MOC3041
R8
51
TRIAC1
R11
100
1/2W
C10
0.1/100V
DIA HEATER ELEMENT
(2) (1)
TC
COIL
200uH
C9
0.1/250VAC
X2
FUSE2
3.15A
DIA O/P (3)
U1
78L08
D1
1N4005
DIA
SW.3
DPST
SW.1
FUSE1
+8V (5)
C5
10
C4
0.1
C3
0.33
C1
100/25V
P3
7PIN
DIA GND (4)
C6
47
Z31
8.2V
R1
1K
C2
100/25V
-8V (6)
1N4005 D2
TRANSFORMER
L
N
E
U5
78L08
1N4005 D5
+8V (5)
C15
10
C14
0.1
C13
0.33
C11
100/25V
P1
8PIN
SIA GND (4)
C16
47
Z32
8.2V
R18
1K
C12
100/25V
SW.2
SIA
-8V (6)
1N4005
D6
U6
MOC3041
R9
51
TRIAC3
R12
100
1/2W
C17
0.1/100V
SIA O/P (3)
PTC THERMISTOR
SIA HEATER ELEMENT
1-5:6PIN SOCKET
P2
FILE:9880.SCH
XYTRONIC INDUCTRIES LTD.
Title
TEMPERATURE CONTROLLED DESODERING STATION
Size
B
Document Number
MODEL:988 <66-213100-21 DRIVER PCB>
REV
1
Date: August 28, 1988
Sheet 1 of 1